Bullet 6S

CAMERA

ORIGINALITY DESIGN SMART - AND BEAUTIFUL

QUICK GUIDE

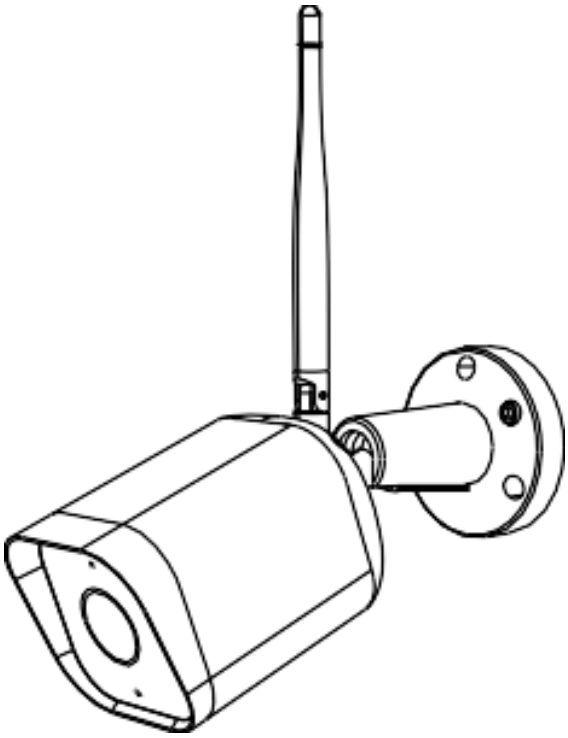

AUTO HOMATION

What's in the box

Consult the checklist below for all components.

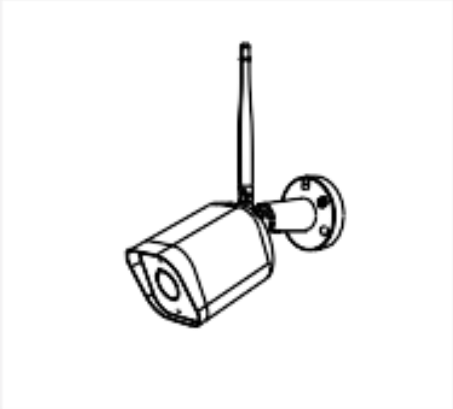

Camera

Power adapter

Screw package

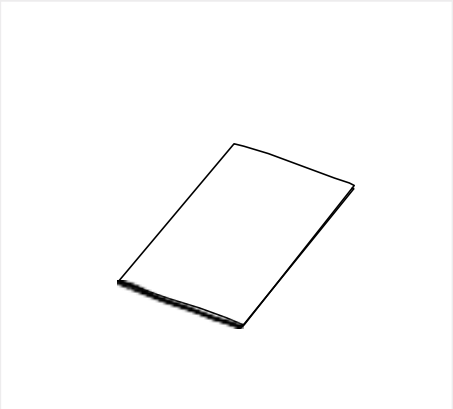

Manual

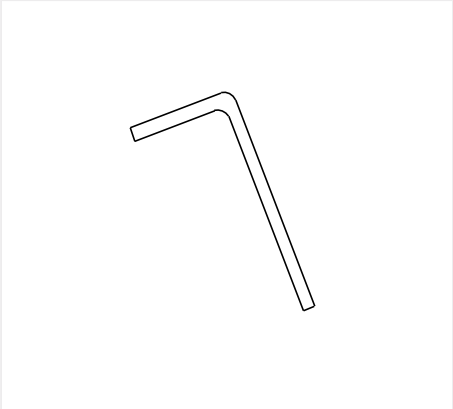

Screwdriver

Description

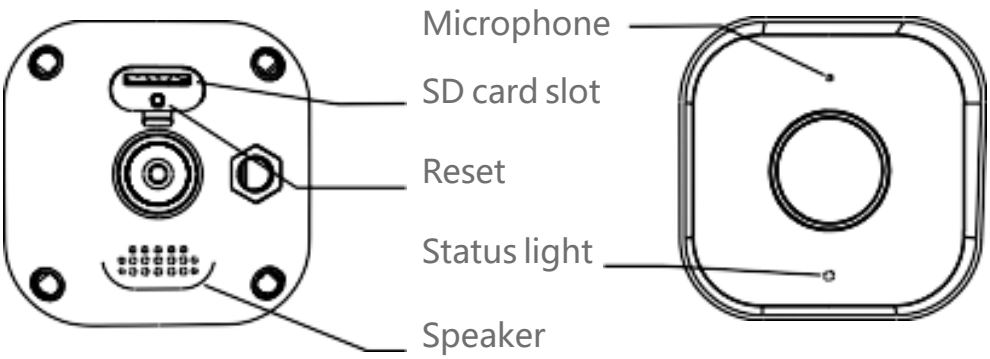

Power	DC12±10%
Status light	• Solid red light on: network is malfunctional • Blinking red light: wait for network connection (fast) • Solid blue light on: the camera is working correctly
Microphone	Capture sound for your video
SD card slot	Support local SD Card storage (Max.128G)
Reset	Press and hold for 5 seconds to reset the camera (if you have modified settings, they will return to factory defaults)

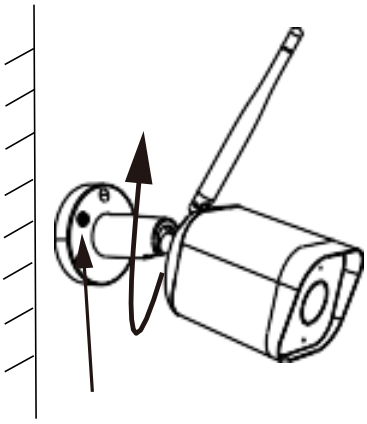

After adjusting your camera angle,
please lock this screw

1 Fix the camera to the wall with screws

2 Adjust camera angle to a correct view (as shown in the picture)

Download

SmartLife or AutoHomation Smart is available for both iOS and Android OS. Search the name 'SmartLife','AutoHomation Smart' in App Store or Google Play, or scan the QR- Code to download the App. You can select the App according to needs.

·Support

Set up router

The router supports the 2.4GHz Wi-Fi (doesn't support the 5GHz), and is connected to the Wi-Fi network. Please set the parameters of the router before connecting the Wi-Fi network, and record the SSID and password of your Wi-Fi.

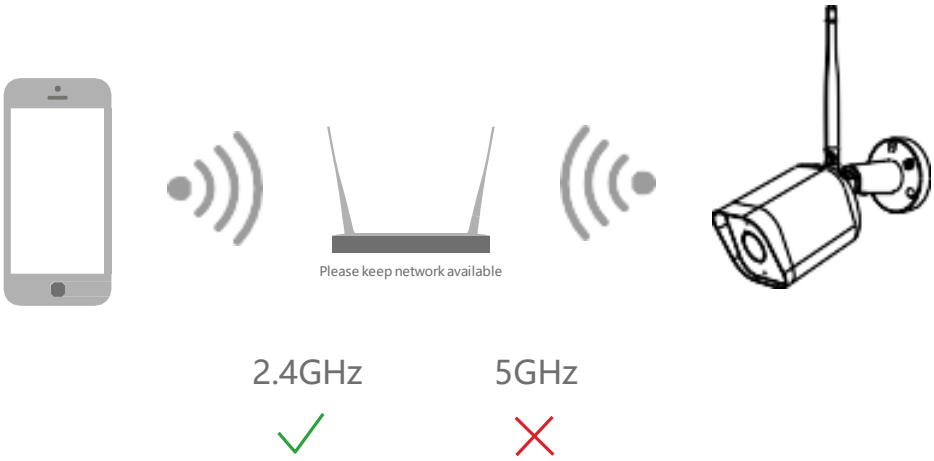

Registration process

Step 1 Open the Smart Life App, click "Sign Up", read the "User Agreement Privacy Policy" and click "Agree" .

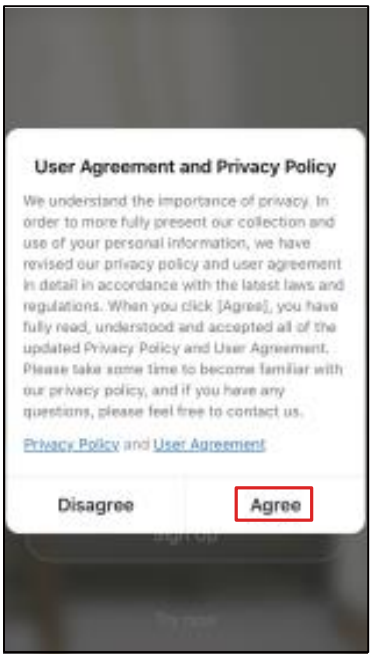

Step 2 Input a legal and valid Mobile number or Email address and click "Get Verification Code". Input the verification code to log in.

1 Open the Smart Life App, click "My" >> "Home Management" >> "Create a home", and you can customize the home name and related settings.

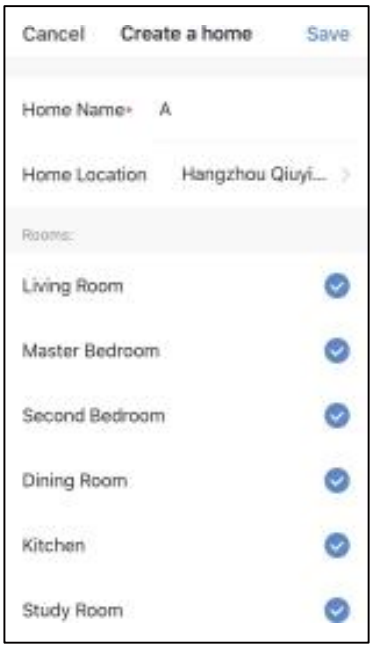

2 Click "Add Device" or "+", and then select "Security & Sensor" >> "Smart Camera" to add camera.

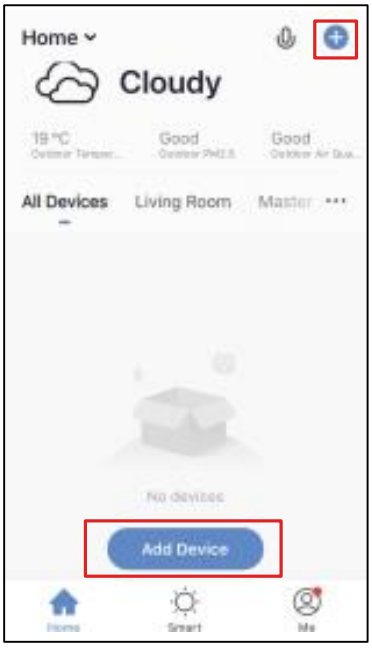

3 Power on and reset camera until the status indicator is flashing quickly or a prompt tone is heard, and then click "Next". Then input your Wi-Fi's passwords and click "Next".
Click "⇋" to change network.

Note:

1) Camera only supports 2.4GHz Wi-Fi network.

2) The number of bits in the SSID and passwords of the router should not exceed 24 digits.

4 In this interface, you should scan the QR code in your phone with the camera,when the camera comes out "dong dong dong". And you can complete the configuration about 30s.

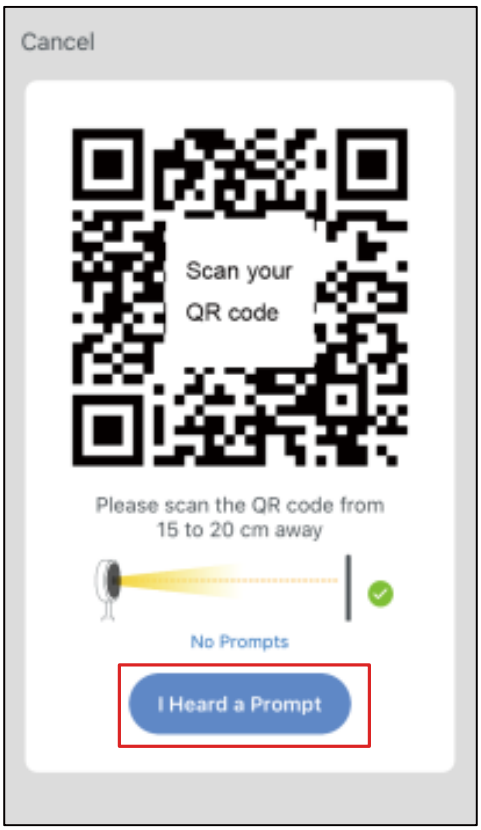

5 When connecting, you should make sure your router,mobile,and camera are as close as possible. When camera added successfully,click " you could also DIY the camera's name.

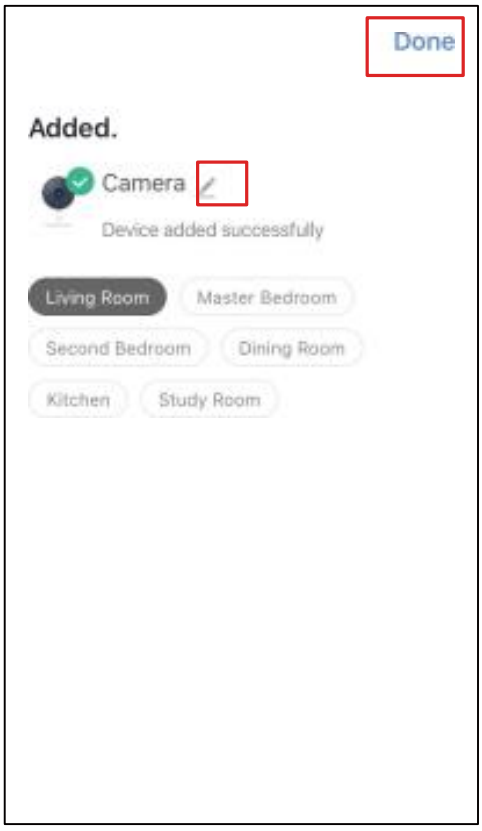

In "Smart Camera" interface,click " you can set the camera common functions.

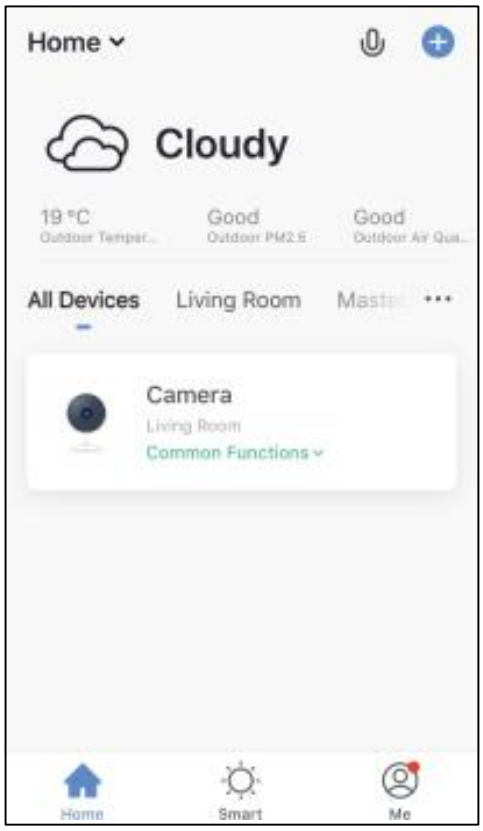

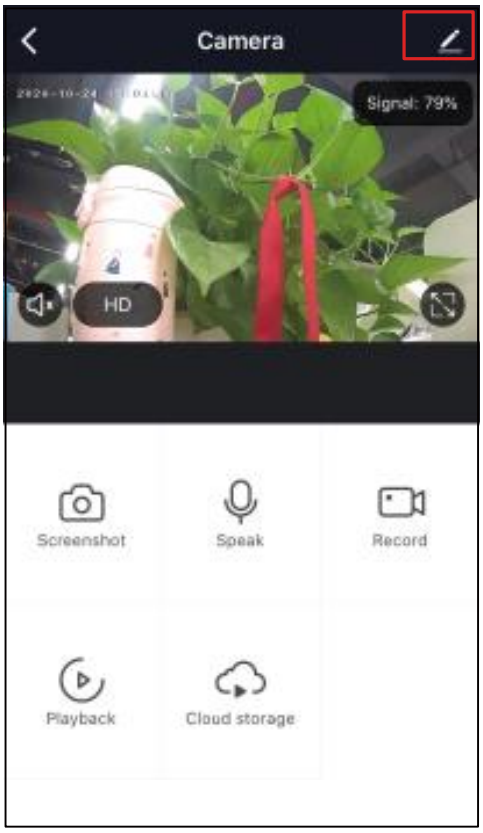

Q: The device cannot be previewed properly?

A: Check whether the network is normal, you can place the camera close to the router, and if not, it is recommended to reset the device and add it again.

Q: Why is it still in the list of devices after reseting?

A: The reset device only resets the network configuration of the camera, but cannot change the configuration on the App, remove the camera, and must be deleted by the App.

Q: How to cut the camera network to another router?

A: First remove and reset the device on the App and then configure the device again by the App.

Q: Why doesn't the device identify the SD card?

A: It is recommended to plug in SD card after power cut. Confirm whether the SD card is normally available and the format is FAT32. And the TF card can’t be identified when the Internet environment is not good.

Q: Why I can’t get the notifications with my cell phone App?

A: Please confirm that the App has been running on the phone, and the relevant reminder function has been opened;Message notification and authority confirmation in the mobile phone system have been opened.

AUTO HOMATION

Video flip

Flip your video stream up or down for maximum flexibility.

Motion detection

Support smart motion detection. The camera will detect movements, and then send you push notifications and app alerts.

Record

Support 24H continuous recording with high capacity SD storage or Cloud storage.

Day & Night

Never miss a moment, even in complete darkness, with powerful night-vision technology.

Daytime

Night